MAEDA Mini Cranes

Max Lifting Height 12.52m

Working Radius 12.16m

Capacity 2.98t x 2.5m

Weight 3900-4080kg

MC305

Courtesy of Machine.Market

MC305

The MC305-2 is the first of the "ride on" Maeda Mini Cranes and is extremely powerful for its small stature. Up to 2.98 tons of lifting power from a machine only 1280mm wide. The superior quality and engineering of the Maeda product line gives longevity of use and higher return on rental investments are enjoyed by end users across the board.

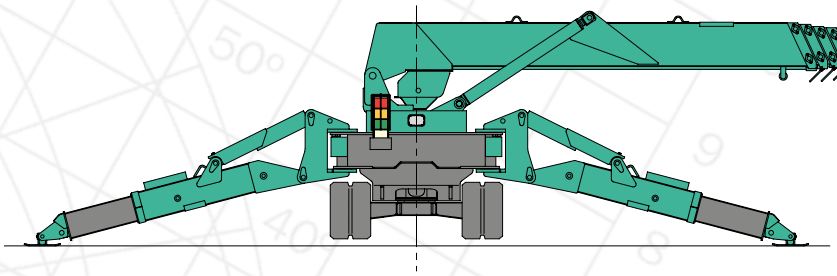

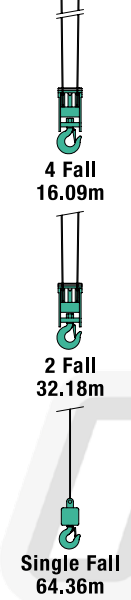

- 2.98 Ton Max Capacity
- 12.52m Max Working Height
- Energy Saving System
- Sheaves Protected Inside Boom
- Variable (Hi/Lo) Travel Speeds
- Programmable Moment Limiter
- Hydrostatic Transmission
- Centralized Controls
- 4 Fall / 2 Fall Hook Block
- Automatic Hook Stowage System
- Tilt Alarm
- Powerful Two Speed Winch with Hydraulic Disc Brake
- Digital Feedback Remote Control
- Outrigger Interlock System
- Optional 300kg / 850kg Searcher Hook
- Data Logger
- 2 Year Warranty

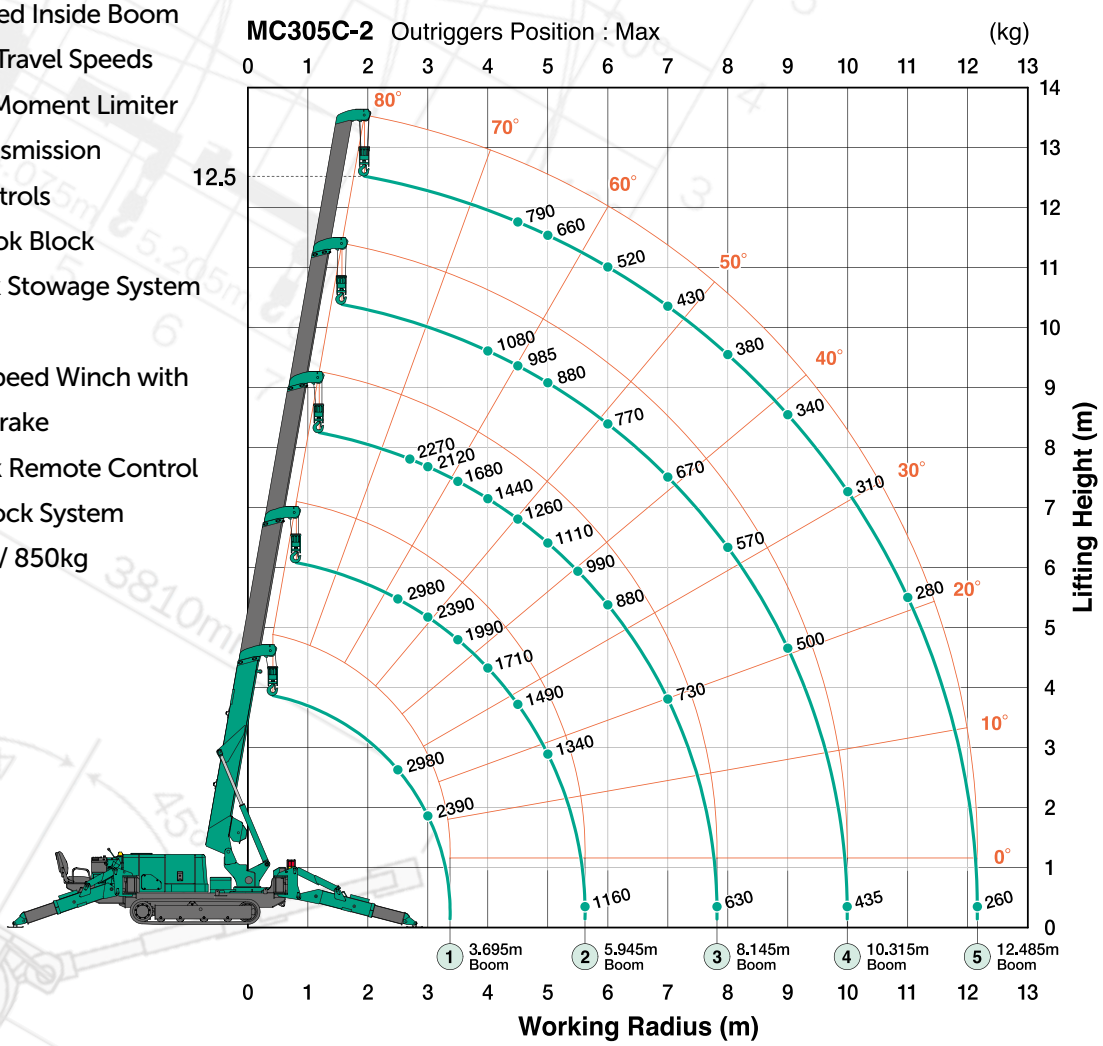

This working range chart shows total rated load including boom deflection.

Courtesy of Machine.Market

Total rated load with Outriggers at Maximum position with 850kg Searcher Hook

	3.695m boom	5.945m boom	8.145m boom	10.315m boom	12.485m boom
Working radius (m)	Total rated load (kg)				
2.5	850	850			
2.7	850	850	850		
3.0	850	850	850		
3.8	850	850	850		
4.0		850	850	850	
4.5		850	850	850	750
5.0		850	850	850	620
6.1		850	840	700	480
7.0			720	630	400
8.3			560	520	340
9.0				470	310
10.4				390	260
11.0					250
12.6					220

Total rated load Outriggers at Maximum position

3.7m/5.945m boom		8.145m boom		10.315m boom		12.485m boom	
Working radius (m)	Total rated load (kg)	Working radius (m)	Total rated load (kg)	Working radius (m)	Total rated load (kg)	Working radius (m)	Total rated load (kg)
< 2.5	2980	2.7	2270	4	1080	< 4.5	790
3	2390	3	2120	4.5	985	5	660
3.5	1990	3.5	1680	5	880	6	520
4	1710	4	1440	6	770	7	430
4.5	1490	4.5	1260	7	670	8	380
5	1340	5	1110	8	570	9	340
5.62	1160	5.5	990	9	500	10	310
		6	880	9.99	435	11	280
		7	730			12.16	260
		7.82	630				

Total rated load Outriggers at Middle position

3.7m/5.945m boom		8.145m boom		10.315m boom		12.485m boom	
Working radius (m)	Total rated load (kg)	Working radius (m)	Total rated load (kg)	Working radius (m)	Total rated load (kg)	Working radius (m)	Total rated load (kg)
< 2.5	2980	2.7	2270	4	1060	< 4.5	780
3	2360	3	2090	4.5	950	5	650
3.5	1960	3.5	1680	5	860	6	500
4	1680	4	1420	6	750	7	410
4.5	1380	4.5	1240	7	630	8	360
5	1140	5	1070	8	490	9	320
5.62	950	5.5	950	9	410	10	290
		6	800	9.99	350	11	260
		7	610			12.16	250
		7.82	520				

Total rated load Outriggers at Minimum position

3.7m/5.945m boom		8.145m boom		10.315m boom		12.485m boom	
Working radius (m)	Total rated load (kg)	Working radius (m)	Total rated load (kg)	Working radius (m)	Total rated load (kg)	Working radius (m)	Total rated load (kg)
< 2.5	2980	2.7	2270	4	1060	< 4.5	780
3	2350	3	2090	4.5	950	5	650
3.5	1800	3.5	1680	5	860	6	500
4	1430	4	1370	6	680	7	410
4.5	1140	4.5	1120	7	530	8	360
5	950	5	910	8	420	9	320
5.62	790	5.5	790	9	340	10	290
		6	670	9.99	300	11	240
		7	510			12.16	210
		7.82	430				

- When using two fall or single fall hooks, use the appropriate four fall Total Rated Load Chart but with a maximum load of:
  Two Fall - 1480kg, Single Fall - 750kg.

Outrigger Footprints

Diagram shows outriggers at maximum position.

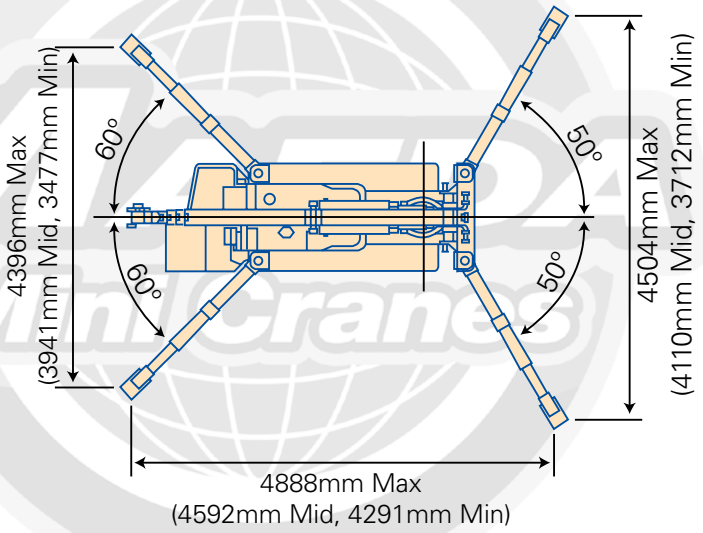

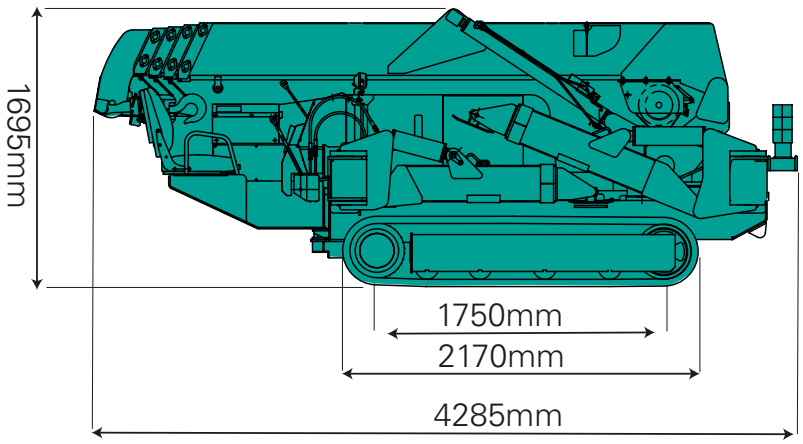

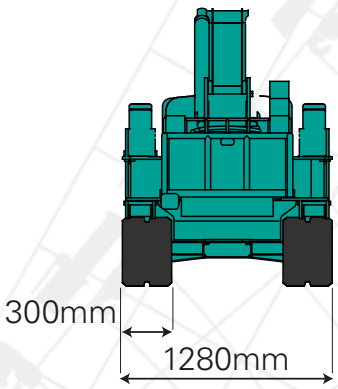

Courtesy of Machine.Market

MC305

Specifications

Capacity	Maximum	2.98 t x 2.5m
Working radius	Maximum	12.16m x 260kg
Lifting height	Maximum	12.52m x 790kg
Dimensions	MC305 CRM/E	4285mm x 1280mm x 1695mm
Weight	MC305 CRM MC305 CRME Hook block weight	3900kg 4080kg 30kg
Hook speed	Maximum	13.5m / min. (4 falls, 4th layer)
Single line speed	Maximum	54m / min. (4th layer)
Hoist rope	Type	IWRC 6 x WS (26) Ø 8mm x 73m
Telescopic system	Boom length Telescoping speed Boom type	3.695m - 12.485m 8.79m / 26 sec Fully automatic 5 section pentagonal telescopic boom
Boom hoist system	Hoist angle / speed	0º - 80º / 14.5 sec
Slew system	Slew angle / speed	360º continuous / 2.4 rpm
Outrigger system	Type Maximum outriggers	Extension and set-up by hydraulic cylinders (Length) 4888mm x (Front) 4504mm x (Rear) 4396mm
Traction system	Drive Travel speed Gradability Ground length x width Ground pressure	Hydraulic motor driven, stepless speed changer 0 - 2.8 km/h 23º 1750mm x 300mm (Track dimensions) 0.37 kgf / cm² (0.38 kgf / cm² CRME)
Engine	Model Type Rated output Starting method Fuel tank capacity	Yanmar 3TNV76 3 cylinder water cooled diesel 15.2 kW / 2500 rpm Electric Diesel / 40L
Electric motor (Optional)	Type Size	Fully enclosed fan cooled motor 5.5 kW 4P 380V
Safe load indicator	Made specifically for Maeda Mini Cranes with a fully programmable working envelope	
Standard equipment	Overwind protection, hydraulic safety valves, level, tilt alarm, EMO switch, travel lock lever, outrigger interlock system, moment limiter, working status lamp, hour-meter, 4-fall / 2-fall hook block, black rubber tracks, digital feedback remote control, data logger	
Optional equipment	Radio remote control White rubber tracks Single fall hook 300 / 850kg searcher hook Slew restrictor Engine heater Hydraulic heater Spark arrestor Plastic machine cover	

MAEDA Mini Cranes

www.maedacranes.com

Courtesy of Machine.Market